SIEMENS

Data sheet 3RW5244-6AC04

SIRIUS soft starter 200-480 V 250 A, 24 V AC/DC Screw terminals Analog output

product brand name	SIRIUS
product category	Hybrid switching devices
product designation	Soft starter
product type designation	3RW52
manufacturer's article number	
● of standard HMI module usable	3RW5980-0HS00
● of high feature HMI module usable	3RW5980-0HF00
● of communication module PROFINET standard usable	3RW5980-0CS00
● of communication module PROFIBUS usable	3RW5980-0CP00
● of communication module Modbus TCP usable	3RW5980-0CT00
● of communication module Modbus RTU usable	3RW5980-0CR00
● of communication module Ethernet/IP	3RW5980-0CE00
● of circuit breaker usable at 400 V	3VA2440-7MN32-0AA0; Type of coordination 1, Iq = 65 kA, CLASS 10
● of circuit breaker usable at 500 V	3VA2440-7MN32-0AA0; Type of coordination 1, Iq = 65 kA, CLASS 10
● of circuit breaker usable at 400 V at inside-delta circuit	3VA2450-7MN32-0AA0; Type of coordination 1, Iq = 65 kA, CLASS 10
● of circuit breaker usable at 500 V at inside-delta circuit	3VA2450-7MN32-0AA0; Type of coordination 1, Iq = 65 kA, CLASS 10
● of the gG fuse usable up to 690 V	2x3NA3354-6; Type of coordination 1, Iq = 65 kA
● of the gG fuse usable at inside-delta circuit up to 500 V	2x3NA3354-6; Type of coordination 1, Iq = 65 kA
● of full range R fuse link for semiconductor protection usable up to 690 V	3NE1331-0; Type of coordination 2, Iq = 65 kA
● of back-up R fuse link for semiconductor protection usable up to 690 V	3NE3336; Type of coordination 2, Iq = 65 kA
General technical data	
starting voltage [%]	30 ... 100 %
stopping voltage [%]	50 ... 50 %
start-up ramp time of soft starter	0 ... 20 s
current limiting value [%] adjustable	130 ... 700 %
certificate of suitability	
● CE marking	Yes
● UL approval	Yes
● CSA approval	Yes
product component is supported	
● HMI-Standard	Yes
● HMI-High Feature	Yes
product feature integrated bypass contact system	Yes

Subject to change without notice
© Copyright Siemens

number of controlled phases	3
trip class	CLASS 10A (default) / 10E / 20E; acc. to IEC 60947-4-2
buffering time in the event of power failure	
● for main current circuit	100 ms
● for control circuit	100 ms
insulation voltage rated value	600 V
degree of pollution	3, acc. to IEC 60947-4-2
impulse voltage rated value	6 kV
blocking voltage of the thyristor maximum	1 600 V
service factor	1
surge voltage resistance rated value	6 kV
maximum permissible voltage for safe isolation	
● between main and auxiliary circuit	600 V
shock resistance	15 g / 11 ms, from 12 g / 11 ms with potential contact lifting
vibration resistance	15 mm to 6 Hz; 2g to 500 Hz
utilization category acc. to IEC 60947-4-2	AC 53a
reference code acc. to IEC 81346-2	Q
Substance Prohibitance (Date)	15.02.2018 00:00:00
product function	
● ramp-up (soft starting)	Yes
● ramp-down (soft stop)	Yes
● Soft Torque	Yes
● adjustable current limitation	Yes
● pump ramp down	Yes
● intrinsic device protection	Yes
● motor overload protection	Yes; Electronic motor overload protection
● evaluation of thermistor motor protection	No
● inside-delta circuit	Yes
● auto-RESET	Yes
● manual RESET	Yes
● remote reset	Yes; By turning off the control supply voltage
● communication function	Yes
● operating measured value display	Yes; Only in conjunction with special accessories
● error logbook	Yes; Only in conjunction with special accessories
● via software parameterizable	No
● via software configurable	Yes
● **PROFIenergy**	Yes; in connection with the PROFINET Standard communication module
● **firmware update**	Yes
● **removable terminal for control circuit**	Yes
● torque control	No
● analog output	Yes; 4 ... 20 mA (default) / 0 ... 10 V (parameterizable with High Feature HMI)
Power Electronics	
operational current	
● at 40 °C rated value	250 A
● at 50 °C rated value	220 A
● at 60 °C rated value	200 A
operational current at inside-delta circuit	
● at 40 °C rated value	433 A
● at 50 °C rated value	381 A
● at 60 °C rated value	346 A
operating voltage	
● rated value	200 ... 480 V
● at inside-delta circuit rated value	200 ... 480 V
relative negative tolerance of the operating voltage	-15 %
relative positive tolerance of the operating voltage	10 %
relative negative tolerance of the operating voltage at inside-delta circuit	-15 %

Subject to change without notice
© Copyright Siemens

relative positive tolerance of the operating voltage at inside-delta circuit	10 %
operating power for 3-phase motors	
● at 230 V at 40 °C rated value	75 kW
● at 230 V at inside-delta circuit at 40 °C rated value	132 kW
● at 400 V at 40 °C rated value	132 kW
● at 400 V at inside-delta circuit at 40 °C rated value	250 kW
Operating frequency 1 rated value	50 Hz
Operating frequency 2 rated value	60 Hz
relative negative tolerance of the operating frequency	-10 %
relative positive tolerance of the operating frequency	10 %
adjustable motor current	
● at rotary coding switch on switch position 1	100 A
● at rotary coding switch on switch position 2	110 A
● at rotary coding switch on switch position 3	120 A
● at rotary coding switch on switch position 4	130 A
● at rotary coding switch on switch position 5	140 A
● at rotary coding switch on switch position 6	150 A
● at rotary coding switch on switch position 7	160 A
● at rotary coding switch on switch position 8	170 A
● at rotary coding switch on switch position 9	180 A
● at rotary coding switch on switch position 10	190 A
● at rotary coding switch on switch position 11	200 A
● at rotary coding switch on switch position 12	210 A
● at rotary coding switch on switch position 13	220 A
● at rotary coding switch on switch position 14	230 A
● at rotary coding switch on switch position 15	240 A
● at rotary coding switch on switch position 16	250 A
● minimum	100 A
adjustable motor current	
● for inside-delta circuit at rotary coding switch on switch position 1	173 A
● for inside-delta circuit at rotary coding switch on switch position 2	191 A
● for inside-delta circuit at rotary coding switch on switch position 3	208 A
● for inside-delta circuit at rotary coding switch on switch position 4	225 A
● for inside-delta circuit at rotary coding switch on switch position 5	242 A
● for inside-delta circuit at rotary coding switch on switch position 6	260 A
● for inside-delta circuit at rotary coding switch on switch position 7	277 A
● for inside-delta circuit at rotary coding switch on switch position 8	294 A
● for inside-delta circuit at rotary coding switch on switch position 9	312 A
● for inside-delta circuit at rotary coding switch on switch position 10	329 A
● for inside-delta circuit at rotary coding switch on switch position 11	346 A
● for inside-delta circuit at rotary coding switch on switch position 12	364 A
● for inside-delta circuit at rotary coding switch on switch position 13	381 A
● for inside-delta circuit at rotary coding switch on switch position 14	398 A
● for inside-delta circuit at rotary coding switch on switch position 15	416 A
● for inside-delta circuit at rotary coding switch on switch position 16	433 A

Subject to change without notice
© Copyright Siemens

● at inside-delta circuit minimum	173 A
minimum load [%]	15 %; Relative to smallest settable Ie
power loss [W] for rated value of the current at AC	
● at 40 °C after startup	87 W
● at 50 °C after startup	78 W
● at 60 °C after startup	72 W
power loss [W] at AC at current limitation 350 %	
● at 40 °C during startup	3 818 W
● at 50 °C during startup	3 188 W
● at 60 °C during startup	2 799 W
Control circuit/ Control	
type of voltage of the control supply voltage	AC/DC
control supply voltage at AC	
● at 50 Hz rated value	24 V
● at 60 Hz rated value	24 V
relative negative tolerance of the control supply voltage at AC at 50 Hz	-20 %
relative positive tolerance of the control supply voltage at AC at 50 Hz	20 %
relative negative tolerance of the control supply voltage at AC at 60 Hz	-20 %
relative positive tolerance of the control supply voltage at AC at 60 Hz	20 %
control supply voltage frequency	50 ... 60 Hz
relative negative tolerance of the control supply voltage frequency	-10 %
relative positive tolerance of the control supply voltage frequency	10 %
control supply voltage	
● at DC rated value	24 V
relative negative tolerance of the control supply voltage at DC	-20 %
relative positive tolerance of the control supply voltage at DC	20 %
control supply current in standby mode rated value	160 mA
holding current in bypass operation rated value	470 mA
locked-rotor current at close of bypass contact maximum	7.6 A
inrush current peak at application of control supply voltage maximum	3.3 A
duration of inrush current peak at application of control supply voltage	12.1 ms
design of the overvoltage protection	Varistor
design of short-circuit protection for control circuit	4 A gG fuse (Icu=1 kA), 6 A quick-acting fuse (Icu=1 kA), C1 miniature circuit breaker (Icu= 600 A), C6 miniature circuit breaker (Icu= 300 A); Is not part of scope of supply
Inputs/ Outputs	
number of digital inputs	1
number of inputs for thermistor connection	0
number of digital outputs	3
● not parameterizable	2
digital output version	2 normally-open contacts (NO) / 1 changeover contact (CO)
number of analog outputs	1
switching capacity current of the relay outputs	
● at AC-15 at 250 V rated value	3 A
● at DC-13 at 24 V rated value	1 A
Installation/ mounting/ dimensions	
mounting position	with vertical mounting surface +/-90° rotatable, with vertical mounting surface +/- 22.5° tiltable to the front and back
fastening method	screw fixing
height	393 mm

Subject to change without notice
© Copyright Siemens

width	210 mm
depth	203 mm
required spacing with side-by-side mounting	
● forwards	10 mm
● backwards	0 mm
● upwards	100 mm
● downwards	75 mm
● at the side	5 mm
weight without packaging	9.9 kg
Connections/ Terminals	
type of electrical connection	
● for main current circuit	busbar connection
● for control circuit	screw-type terminals
width of connection bar maximum	45 mm
type of connectable conductor cross-sections	
● for DIN cable lug for main contacts stranded	2x (50 ... 240 mm²)
● for DIN cable lug for main contacts finely stranded	2x (70 ... 240 mm²)
type of connectable conductor cross-sections	
● for control circuit solid	1x (0.5 ... 4.0 mm²), 2x (0.5 ... 2.5 mm²)
● for control circuit finely stranded with core end processing	1x (0.5 ... 2.5 mm²), 2x (0.5 ... 1.5 mm²)
● at AWG cables for control circuit solid	1x (20 ... 12), 2x (20 ... 14)
wire length	
● between soft starter and motor maximum	800 m
● at the digital inputs at AC maximum	100 m
● at the digital inputs at DC maximum	1 000 m
tightening torque	
● for main contacts with screw-type terminals	14 ... 24 N·m
● for auxiliary and control contacts with screw-type terminals	0.8 ... 1.2 N·m
tightening torque [lbf·in]	
● for main contacts with screw-type terminals	124 ... 210 lbf·in
● for auxiliary and control contacts with screw-type terminals	7 ... 10.3 lbf·in
Ambient conditions	
installation altitude at height above sea level maximum	5 000 m; Derating as of 1000 m, see catalog
ambient temperature	
● during operation	-25 ... +60 °C; Please observe derating at temperatures of 40 °C or above
● during storage and transport	-40 ... +80 °C
environmental category	
● during operation acc. to IEC 60721	3K6 (no ice formation, only occasional condensation), 3C3 (no salt mist), 3S2 (sand must not get into the devices), 3M6
● during storage acc. to IEC 60721	1K6 (only occasional condensation), 1C2 (no salt mist), 1S2 (sand must not get inside the devices), 1M4
● during transport acc. to IEC 60721	2K2, 2C1, 2S1, 2M2 (max. fall height 0.3 m)
EMC emitted interference	acc. to IEC 60947-4-2: Class A
Communication/ Protocol	
communication module is supported	
● PROFINET standard	Yes
● EtherNet/IP	Yes
● Modbus RTU	Yes
● Modbus TCP	Yes
● PROFIBUS	Yes
UL/CSA ratings	
manufacturer's article number	
● **of circuit breaker**	
— usable for Standard Faults at 460/480 V according to UL	Siemens type: 3VA53, max. 400 A or 3VA54, max. 600 A; Iq = 18 kA

Subject to change without notice
© Copyright Siemens

— usable for High Faults at 460/480 V according to UL	Siemens type: 3VA53, max. 400 A or 3VA54, max. 600 A; Iq max = 65 kA
— usable for Standard Faults at 460/480 V at inside-delta circuit according to UL	Siemens type: 3VA54, max. 600 A; Iq = 18 kA
— usable for High Faults at 460/480 V at inside-delta circuit according to UL	Siemens type: 3VA54, max. 600 A; Iq max = 65 kA
— usable for Standard Faults at 575/600 V according to UL	Siemens type: 3VA53, max. 400 A or 3VA54, max. 600 A; Iq = 18 kA
— usable for Standard Faults at 575/600 V at inside-delta circuit according to UL	Siemens type: 3VA54, max. 600 A; Iq = 18 kA
● of the fuse	
— usable for Standard Faults up to 575/600 V according to UL	Type: Class J / L, max. 800 A; Iq = 18 kA
— usable for High Faults up to 575/600 V according to UL	Type: Class J / L, max. 800 A; Iq = 100 kA
— usable for Standard Faults at inside-delta circuit up to 575/600 V according to UL	Type: Class J / L, max. 800 A; Iq = 18 kA
— usable for High Faults at inside-delta circuit up to 575/600 V according to UL	Type: Class J / L, max. 800 A; Iq = 100 kA
operating power [hp] for 3-phase motors	
● at 200/208 V at 50 °C rated value	60 hp
● at 220/230 V at 50 °C rated value	75 hp
● at 460/480 V at 50 °C rated value	150 hp
● at 200/208 V at inside-delta circuit at 50 °C rated value	125 hp
● at 220/230 V at inside-delta circuit at 50 °C rated value	150 hp
● at 460/480 V at inside-delta circuit at 50 °C rated value	300 hp
contact rating of auxiliary contacts according to UL	R300-B300

Safety related data

protection class IP on the front acc. to IEC 60529	IP00; IP20 with cover
touch protection on the front acc. to IEC 60529	finger-safe, for vertical contact from the front with cover
electromagnetic compatibility	in accordance with IEC 60947-4-2

Certificates/ approvals

General Product Approval	EMC	Declaration of Conformity

CSA CCC UL RCM EG-Konf.

Test Certificates	Marine / Shipping
Type Test Certificates/Test Report	

ABS BUREAU VERITAS LRS PRS DNV·GL

other

Confirmation

Further information

Information- and Downloadcenter (Catalogs, Brochures,…)

Subject to change without notice
© Copyright Siemens

https://www.siemens.com/ic10

Industry Mall (Online ordering system)
https://mall.industry.siemens.com/mall/en/en/Catalog/product?mlfb=3RW5244-6AC04

Cax online generator
http://support.automation.siemens.com/WW/CAXorder/default.aspx?lang=en&mlfb=3RW5244-6AC04

Service&Support (Manuals, Certificates, Characteristics, FAQs,...)
https://support.industry.siemens.com/cs/ww/en/ps/3RW5244-6AC04

Image database (product images, 2D dimension drawings, 3D models, device circuit diagrams, EPLAN macros, ...)
http://www.automation.siemens.com/bilddb/cax_de.aspx?mlfb=3RW5244-6AC04&lang=en

Characteristic: Tripping characteristics, I²t, Let-through current
https://support.industry.siemens.com/cs/ww/en/ps/3RW5244-6AC04/char

Characteristic: Installation altitude
http://www.automation.siemens.com/bilddb/index.aspx?view=Search&mlfb=3RW5244-6AC04&objecttype=14&gridview=view1

Simulation Tool for Soft Starters (STS)
https://support.industry.siemens.com/cs/ww/en/view/101494917

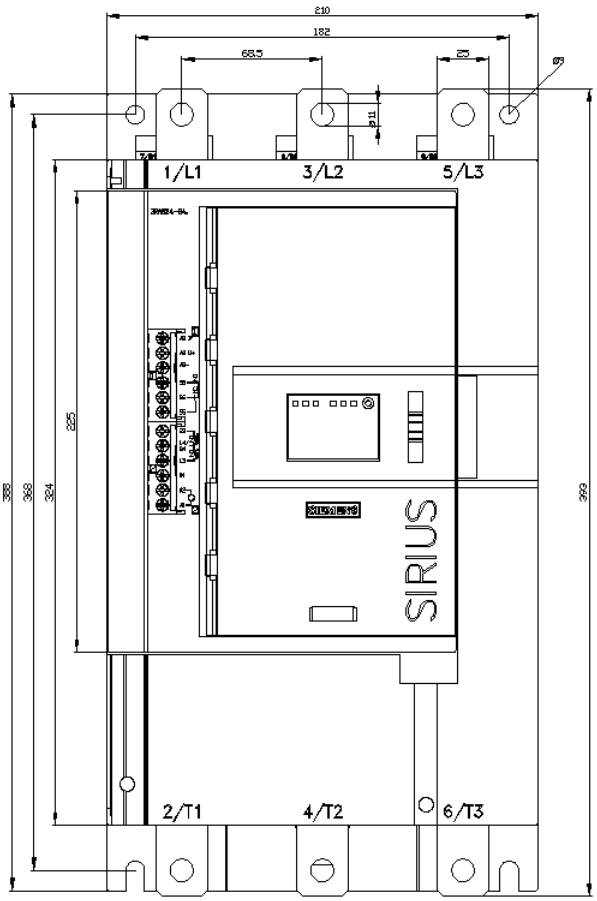

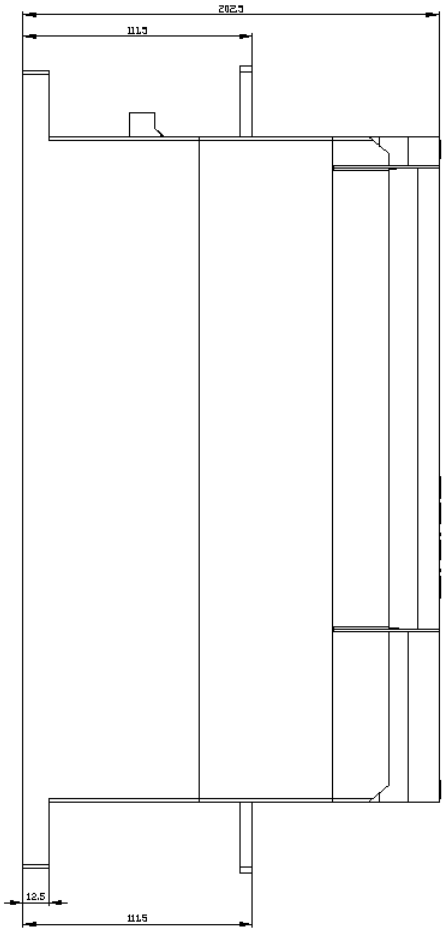

Subject to change without notice
© Copyright Siemens

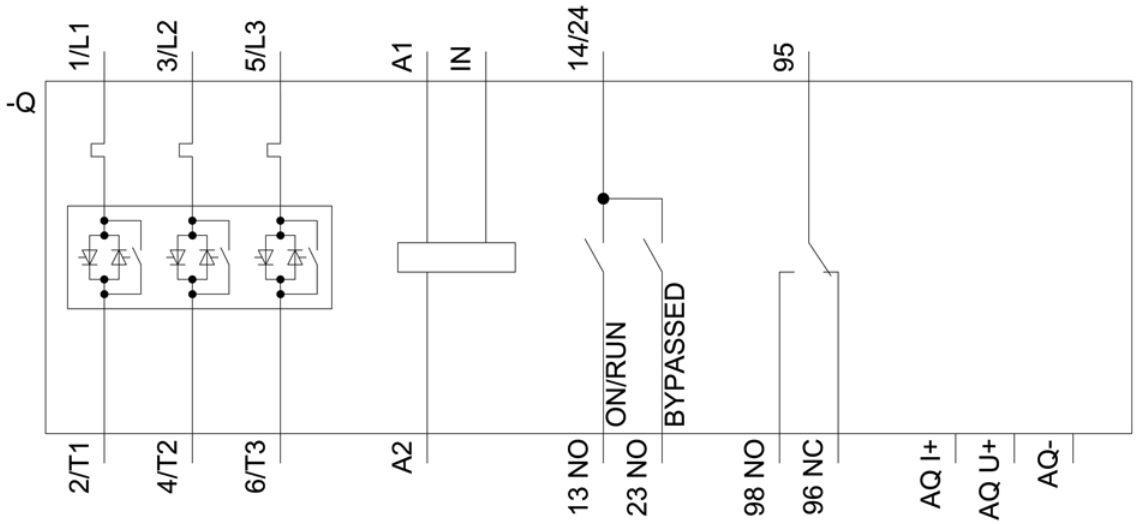

last modified: 12/15/2020

Subject to change without notice
© Copyright Siemens